FOCASEIKI
Just what you need!

Double Column Machine

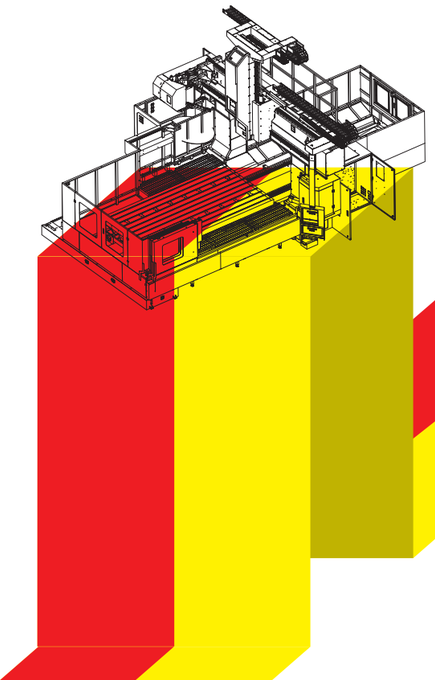

FOCUS SEIKI CORP

No.178, Guangqi Rd., Shengang Dist.,
Taichung City 42948 Taiwan
Tel: +886-4-2561-2611
Fax: +886-4-2561-1613

E-mail: sales@focaseiki.com.tw
www.focaseiki.com.tw

Universal Milling Head

10/2020

- Rugged construction throughout guarantees superior rigidity and stability.
- BT-50, 8000RPM direct drive spindle combined with high/low speed gearbox meets the requirements of high speed, high precision and high torque output at low speed. Also, available to equip with coolant through spindle for efficient cooling on work piece and tool in heavy cutting. This also results in longer tool life and higher parts accuracy.

- The base and the column are box type, one-piece construction combined with solid support for maximum stability when loading extra large work piece.
- Wide range application for BT50 8000RPM spindle, can machining with 1700mm, max length 4000mm, height 900mm work piece
- The spindle head is a symmetrical layout with box type construction. Shortened distance between spindle center and Z-axis slideway faces. The spindle head operates together with a gearbox to fully exhibit extra heavy cutting capacity.

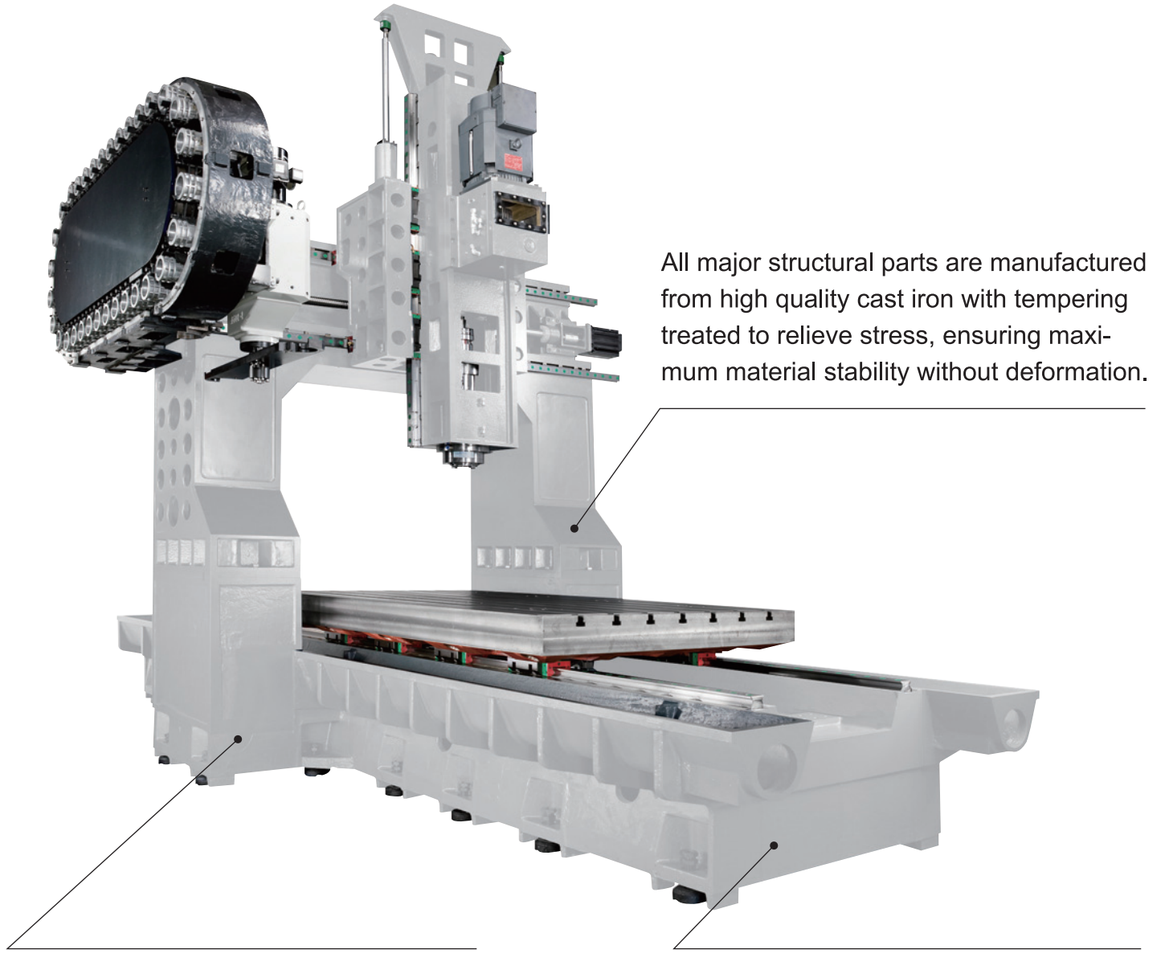

All major structural parts are manufactured from high quality cast iron with tempering treated to relieve stress, ensuring maximum material stability without deformation.

Box type structural parts are rib reinforced to increase structural strength and rigidity.

Extra heavy base complete support of table and resists heavy load without deformation.

Spindle Motor

SJ-D18.5(15kW,8000rpm)

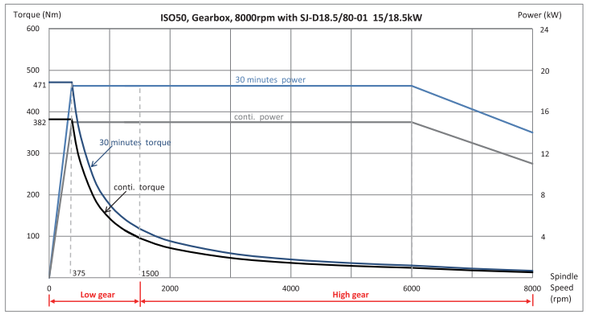

Fanuc-αi**I**-15(15kW,8000rpm)

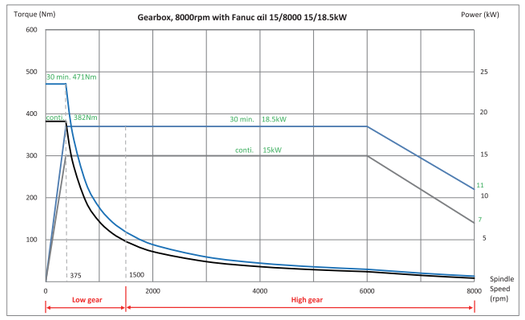

QAN260L(20kw,8000rpm)

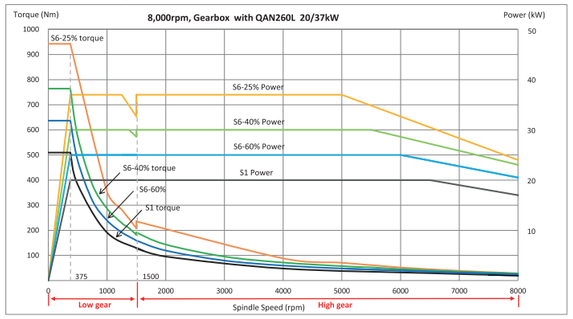

Siemens8133(15kw,8000rpm)

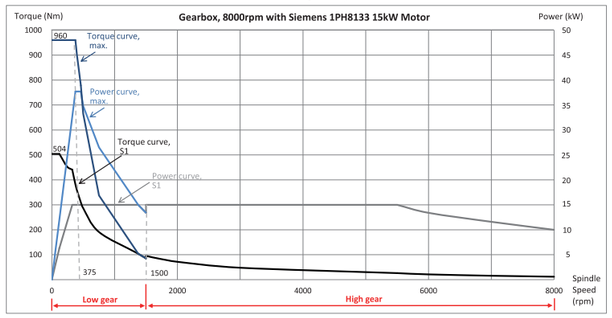

Automatic changing head

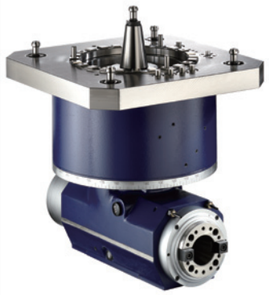

45degree universasl milling head

High RPM 90 degree milling head

Universal milling head

Hydraulic System

· For Z axis moving
· Making Z axis moving more smooth and stable.

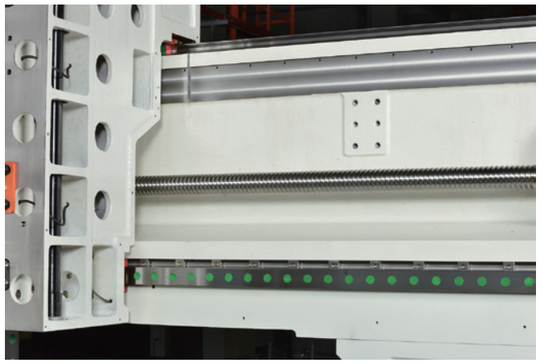

· Perpendicular linear guide way arrangement.
· High damping coefficiency,especially on axial and radial directions.

Gear Head (2 step)

·The spindle running is transmitted through a gear both making the machine excellent for heavy cutting application
·All gears and bearings in the gear box are oil-bath lubricated.

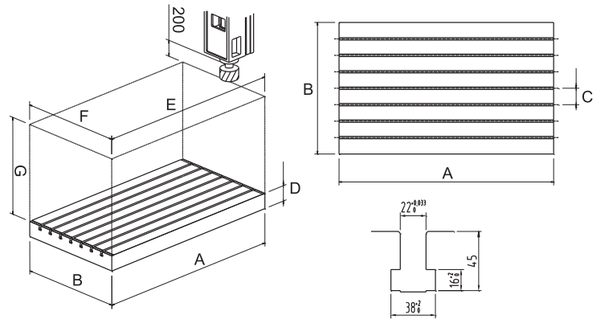

Model	A	B	C	D	E	F	G
FDC1417	1700	1200	150	150	1700	1200	900
FDC1422	2200	1200	150	150	2200	1200	900
FDC1432	3200	1200	150	150	3200	1200	900
FDC1442	4200	1200	150	150	4200	1200	900
FDC1722	2200	1500	150	150	2200	1500	900
FDC1732	3200	1500	150	150	3200	1500	900
FDC1742	4200	1500	150	150	4200	1500	900
FDC1922/FDC2122	2200	1700	150	150	2200	1700	900
FDC1932/FDC2132	3200	1700	150	150	3200	1700	900
FDC1942/FDC2142	4200	1700	150	150	4200	1700	900

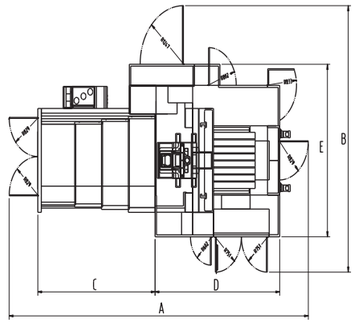

Model	A	B	C	D	E
FDC1417	8600	5700	3370	3580	3685
FDC1422	8600	5700	3370	3580	3685
FDC1432	10600	5700	4460	4840	3685
FDC1442	13300	5700	5520	6130	3685
FDC1722	7260	5310	2990	2700	5150
FDC1732	9300	5310	3500	4290	5150
FDC1742	11480	5310	4770	5170	5150
FDC1922	7260	5310	2990	2700	5150
FDC1932	9300	5310	3500	4290	5150
FDC1942	11480	5310	4770	5170	5150
FDC2122	7260	5510	2990	2700	5350
FDC2132	9300	5510	3500	4290	5350
FDC2142	11480	5510	4770	5170	5350

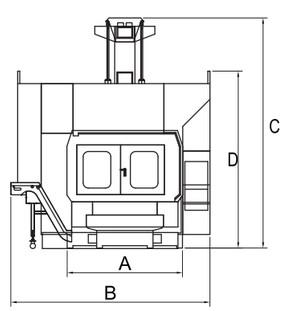

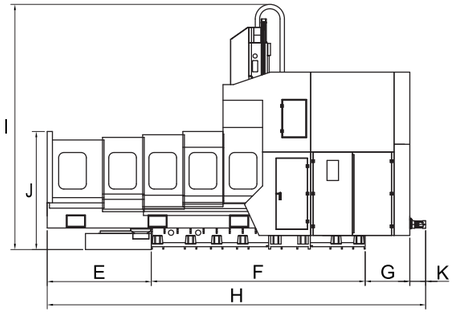

Model	A	B	C	D	E	F	G	H	I	J	K
FDC -1417	2210	3820	4420	3390	1995	4100	860	7250	4700	2270	303
FDC -1422	2210	3820	4420	3390	1995	4100	860	7250	4700	2270	303
FDC -1432	2210	3820	4420	3390	1995	6100	1200	9600	4700	2270	303
FDC -1442	2210	3820	4420	3390	1995	8100	1550	11950	4700	2270	303

Model	A	B	C	D	E	F	G	H	J	K
FDC -1722	3430	5120	4430	1260	4100	820	6490	303	2030	3440
FDC -1732	3430	5120	4430	1185	6100	835	8440	303	2030	3440
FDC -1742	3430	5120	4430	1110	8100	950	10480	303	2030	3440
FDC -1922	3430	5120	4430	1260	4100	820	6490	303	2030	3440
FDC -1932	3430	5120	4430	1185	6100	835	8440	303	2030	3440
FDC -1942	3430	5120	4430	1110	8100	950	10480	303	2030	3440
FDC -2122	3430	5320	4430	1260	4100	820	6490	303	2030	3440
FDC -2132	3430	5320	4430	1185	6100	835	8440	303	2030	3440
FDC -2142	3430	5320	4430	1110	8100	950	10480	303	2030	3440

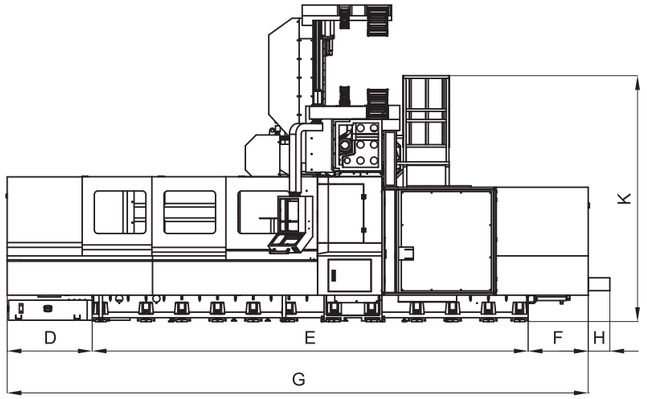

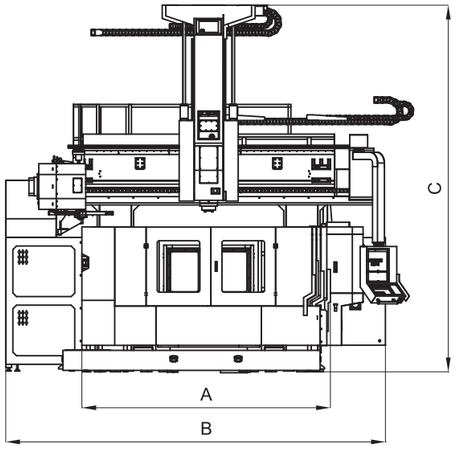

Machine Specification

	14 series				17 series			19 series			21 series		
Model	1417	1422	1432	1442	1722	1732	1742	1922	1932	1942	2122	2132	2142
Travel													
Travel ranges(X*Y*Z mm)	1700x1400x900	2200x1400x900	3200x1400x900	4200x1400x900	2200x1700x900	3200x1700x900	4200x1700x900	2200x1900x900	3200x1900x900	4200x1900x900	2200x2100x900	3200x2100x900	4200x2100x900
Spindle nose to table surface (mm)	150~1050		100~1000		150~1050	100~1000		150~1050	100~1000		150~1050	100~1000	
Spindle center to column (mm)	404				404			404			404		
Distance between column (mm)	1400				1900			1900			2100		
Table													
Table size (mm)	1700x1200	2200x1200	3200x1200	4200x1200	2200x1500	3200x1500	4200x1500	2200x1700	3200x1700	4200x1700	2200x1700	3200x1700	4200x1700
T-slot (width*distance*number mm)	22x150x7				22x150x9			22x150x11			22x150x11		
Max. table load (kgs)	5000	5000	8000	8000	8000	10000	12000	8000	10000	12000	8000	10000	12000
Spindle													
Tllo shank & pull stud	ISO50				ISO50			ISO50			ISO50		
Spindle inner diameter (mm)	F100				F100			F100			F100		
Spindle speed (rpm) Gear	8000				8000			8000			8000		
Draw bar force (kgf)	1800				1800			1800			1800		
Main motor (con/30min kW)	15/18.5				15/18.5			15/18.5			15/18.5		
Axis servo motor													
Rapid feed rate (X/Y/Z m/min)	20/20/20	16/20/20	16/20/20	12/20/20	16/16/20	16/16/20	12/16/20	12/16/20	12/16/20	10/16/20	12/16/20	12/16/20	10/16/20
Feed rate (X/Y/Z mm/min)	10000				10000			10000			10000		
Mitsubishi kW	HF703 7.0				HF703 7.0			HF703 7.0			HF703 7.0		
Fanuc kW	a30/3000i 7.0				a30/3000i 7.0			a30/3000i 7.0			a30/3000i 7.0		
Siemens kW	1FK7105 8.2				1FK7105 8.2			1FK7105 8.2			1FK7105 8.2		
Fagor kW	FXM75.20 7.0				FXM75.20 7.0			FXM75.20 7.0			FXM75.20 7.0		
Heidenhain kW	QSY190D 9.6				QSY190D 9.6			QSY190D 9.6			QSY190D 9.6		
Auto tool changer													
ATC type	Disk/Chain				Disk/Chain			Disk/Chain			Disk/Chain		
Cam type	Arm				Arm			Arm			Arm		
Tool selection (Bi-direction)	Random				Random			Random			Random		
Tool storage capacity (pcs)	24/32				24/32			24/32			24/32		
Max. tool diameter (mm)	F115/F127 (F160/F250)				F115 / F127 (F160/F250)			F115/F127 (F160/F250)			F115/F127 (F160/F250)		
Max. tool length (mm)	350				350			350			350		
Max. tool weight (kg)	20				20			20			20		
Miscellaneous													
Air requirement (kg/cm2)	6				6			6			6		
Voltage	220				220			220			220		
Power requirement (kVA)	50				50			50			50		
Coolant tank capacity (L)	900				900			900			900		
Machine weight (kgs)	15500	16000	17000	18000	21000	22500	24000	22000	23500	25000	23500	24000	25500
Machine height (mm)	4500				4430			4430			4430		
Floor space (L*W mm)	5800x4150	6090x4150	8130x4150	10310x4150	6490x5120	8440x5120	10480x5120	6490x5120	8440x5120	10480x5120	6490x5320	8440x5320	10480x5320

Standard Accessories:

Air blast through spindle
Air blast for workpiece (nose)
X-axis telescopic cover
Automatic lubrication system
Working lamp
Operation status light
Screw type chip conveyors
Chain type 32-tool ATC
Gear head
Cooling system
Air gun/water gun
MPG handwheel
Air conditioner
RS-232 interface
Spindle oil cooler
Tool box
Chain type chip conveyor
Z-axis pneumatic balance system
Levelling bolts and pads
Semi-full splash safety guard

Options:

Transformer
Full splash guard
Coolant through spindle
Linear scales
Rotary table
Adjusting tools and box
Flushing device
Foundation bolts
Auto tool length measurement
Auto workpiece measurement
Manual universal head (90 degree)
Auto universal head (90 degree)